Dolores River

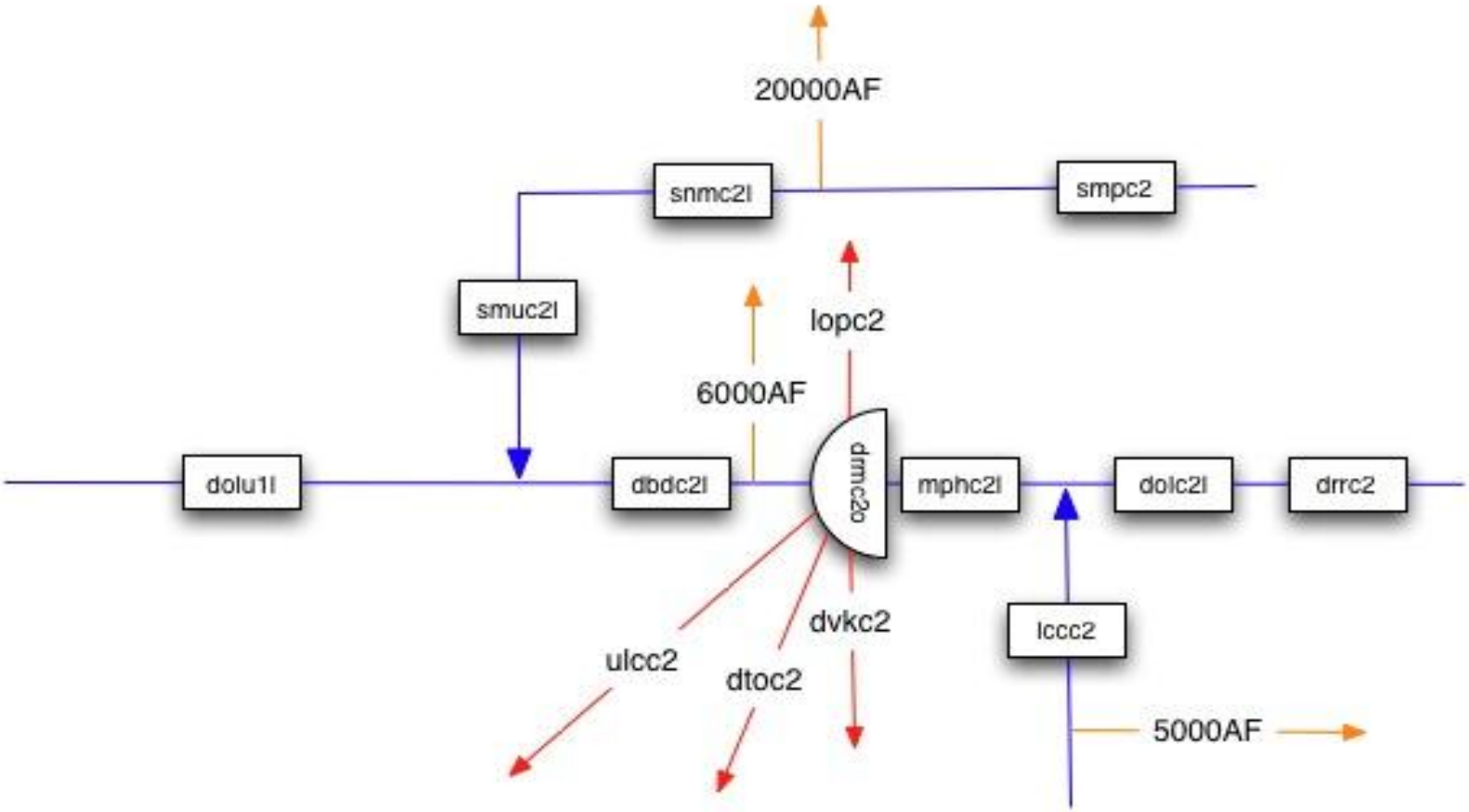

river
diversion
consumptive use
import

river segment

reservoir segment

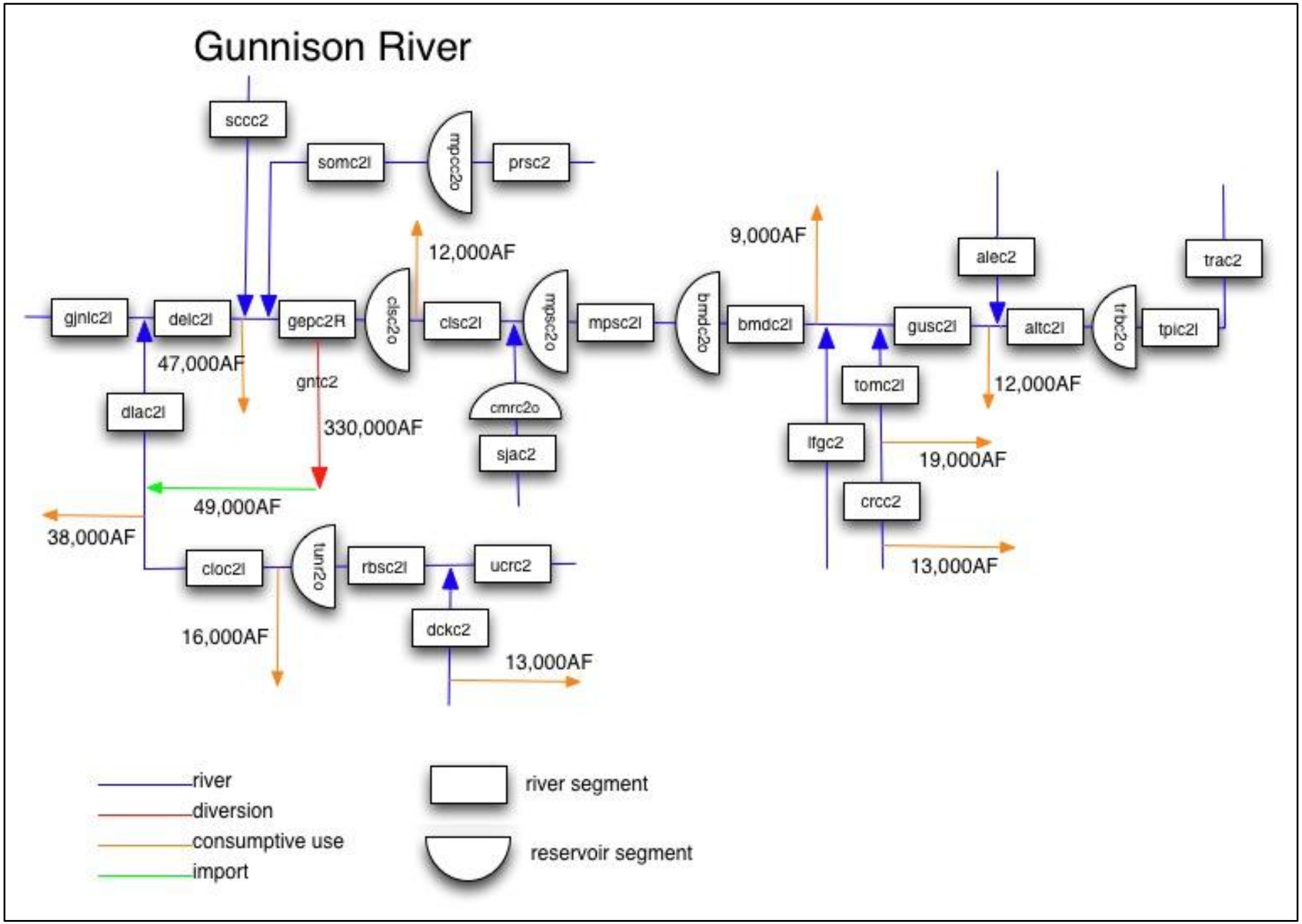
Gunnison River
sccc2
somc2l
mpcc2o
prsc2
12,000AF
9,000AF
alec2
trac2
gjnlc2l
delc2l
gepc2R
clsc2o
clsc2l
mpsc2o
mpsc2l
bmdc2o
bmdc2l
gusc2l
altc2l
trbc2o
tpic2l
47,000AF
gntc2
tomc2l
12,000AF
dlac2l
330,000AF
cmrc2o
sjac2
lfgc2
19,000AF
crcc2
49,000AF
38,000AF
cloc2l
turr2o
rbsc2l
ucrc2
13,000AF
16,000AF
dckc2
13,000AF
river
diversion
consumptive use
import
river segment
reservoir segment