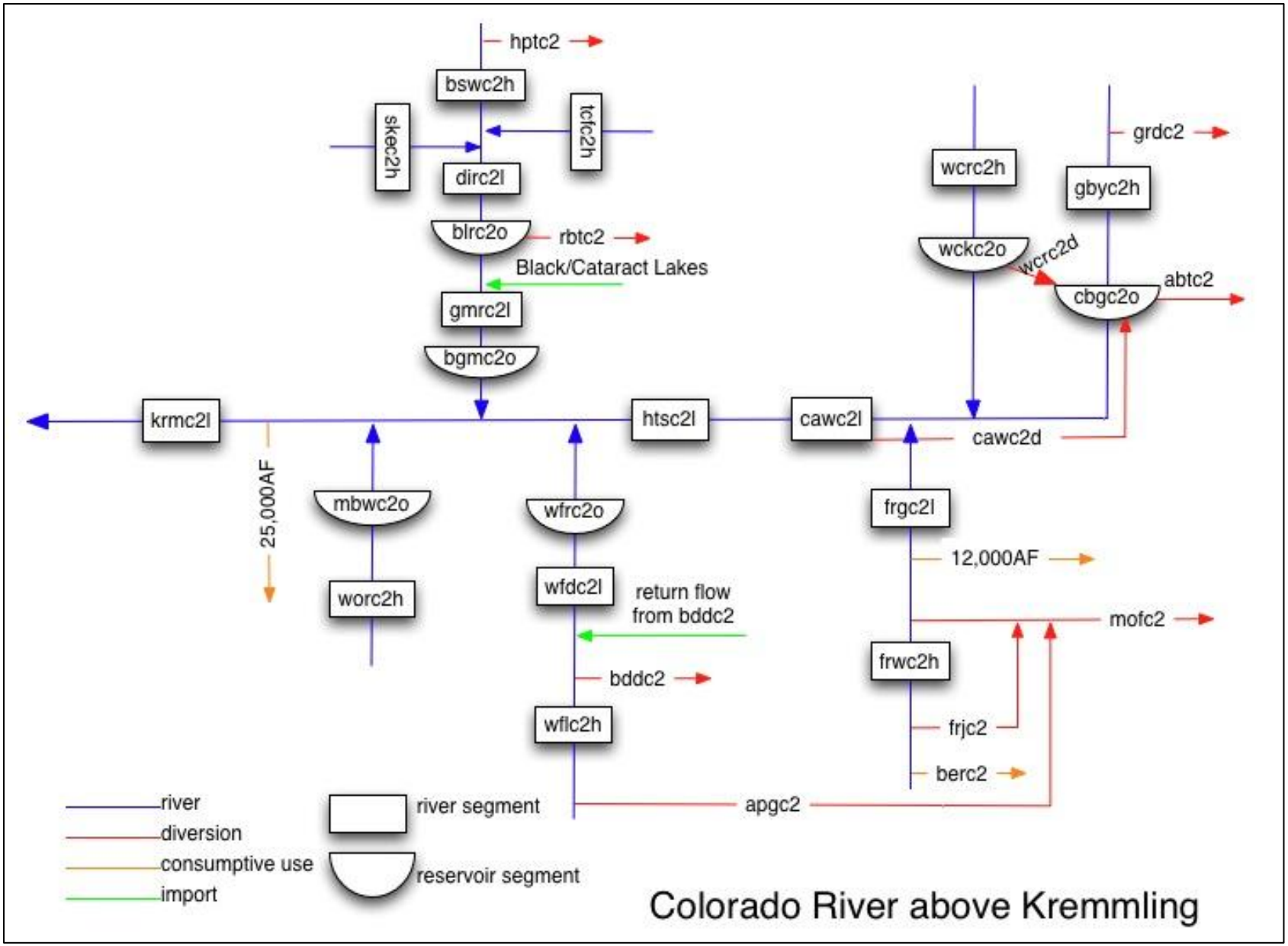
hptc2
bswc2h
skec2h
tcfc2h
dirc2l
blrc2o
rbtc2
Black/Cataract Lakes
gmrc2l
bgmc2o
krmc2l
htsc2l
cawc2l
cawc2d
wcrc2h
wckc2o
wcrc2d
grdc2
gbyc2h
cbgc2o
abtc2
25,000AF
mbwc2o
worc2h
wfrc2o
wfdc2l
return flow
from bddc2
bddc2
wflc2h
frgc2l
12,000AF
mofc2
frwc2h
frjc2
berc2
apgc2
river
diversion
consumptive use
import
river segment
reservoir segment
Colorado River above Kremmling

Colorado River Between Kremmling and Glenwood Springs

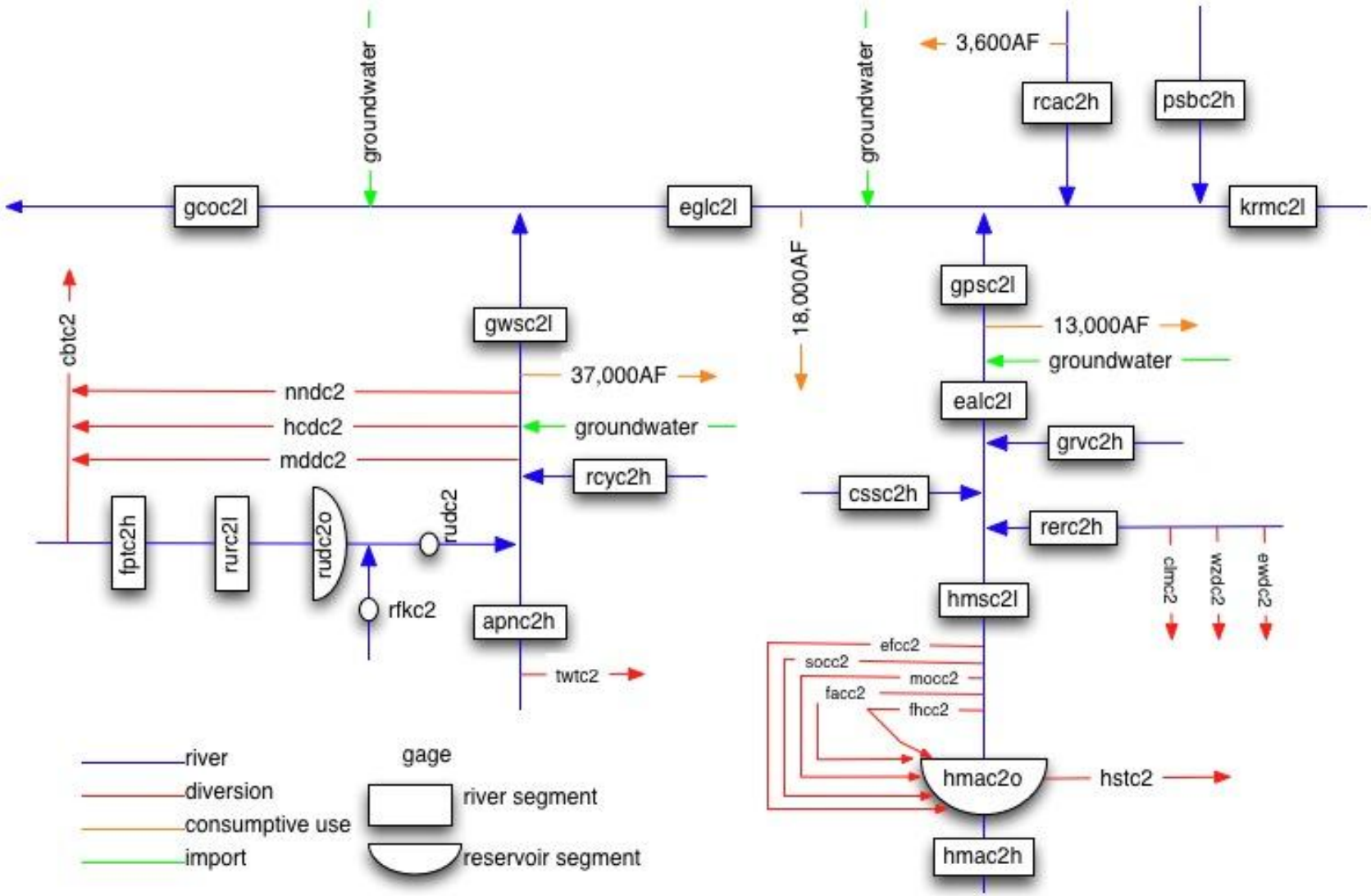
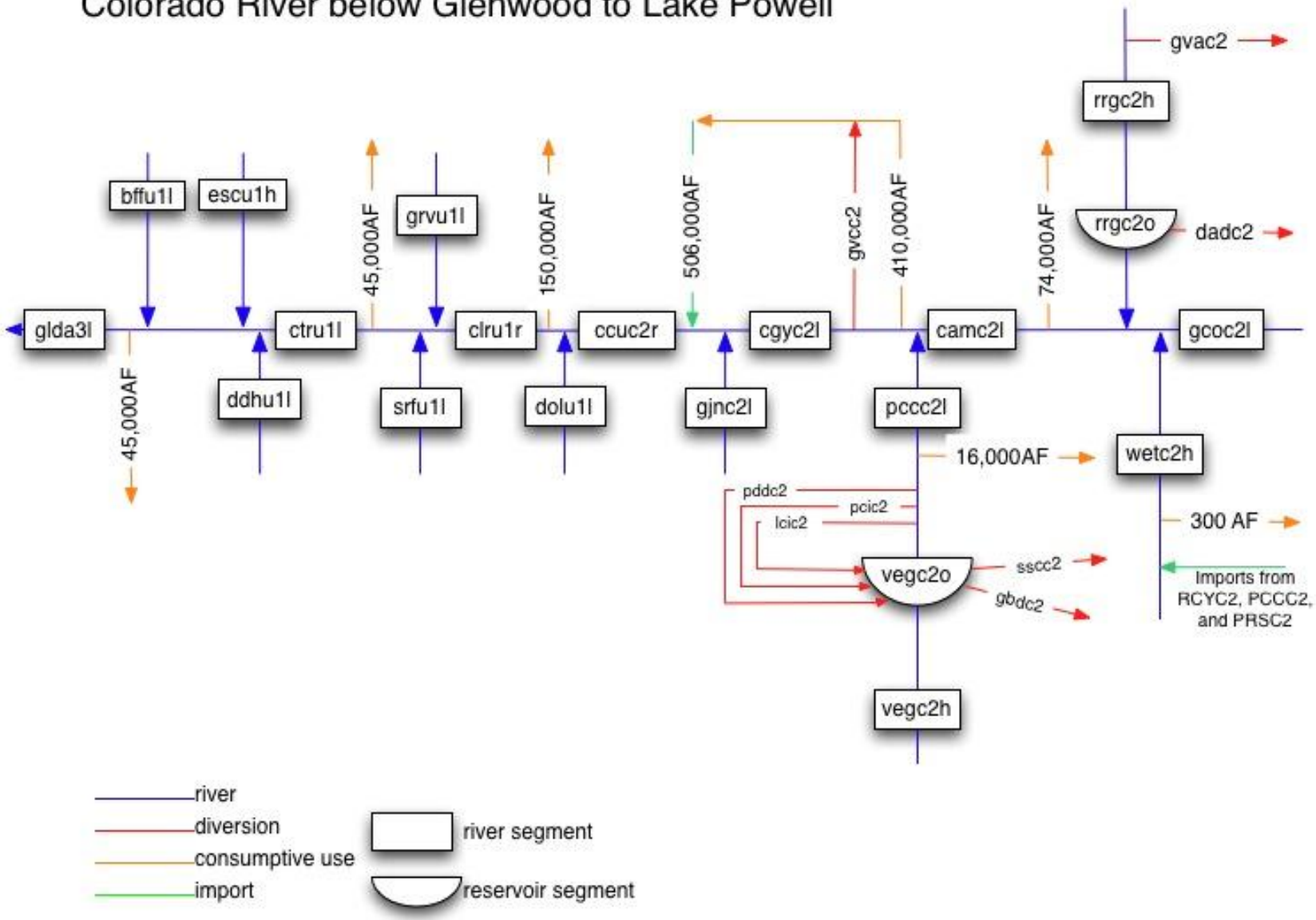
Colorado River below Glenwood to Lake Powell